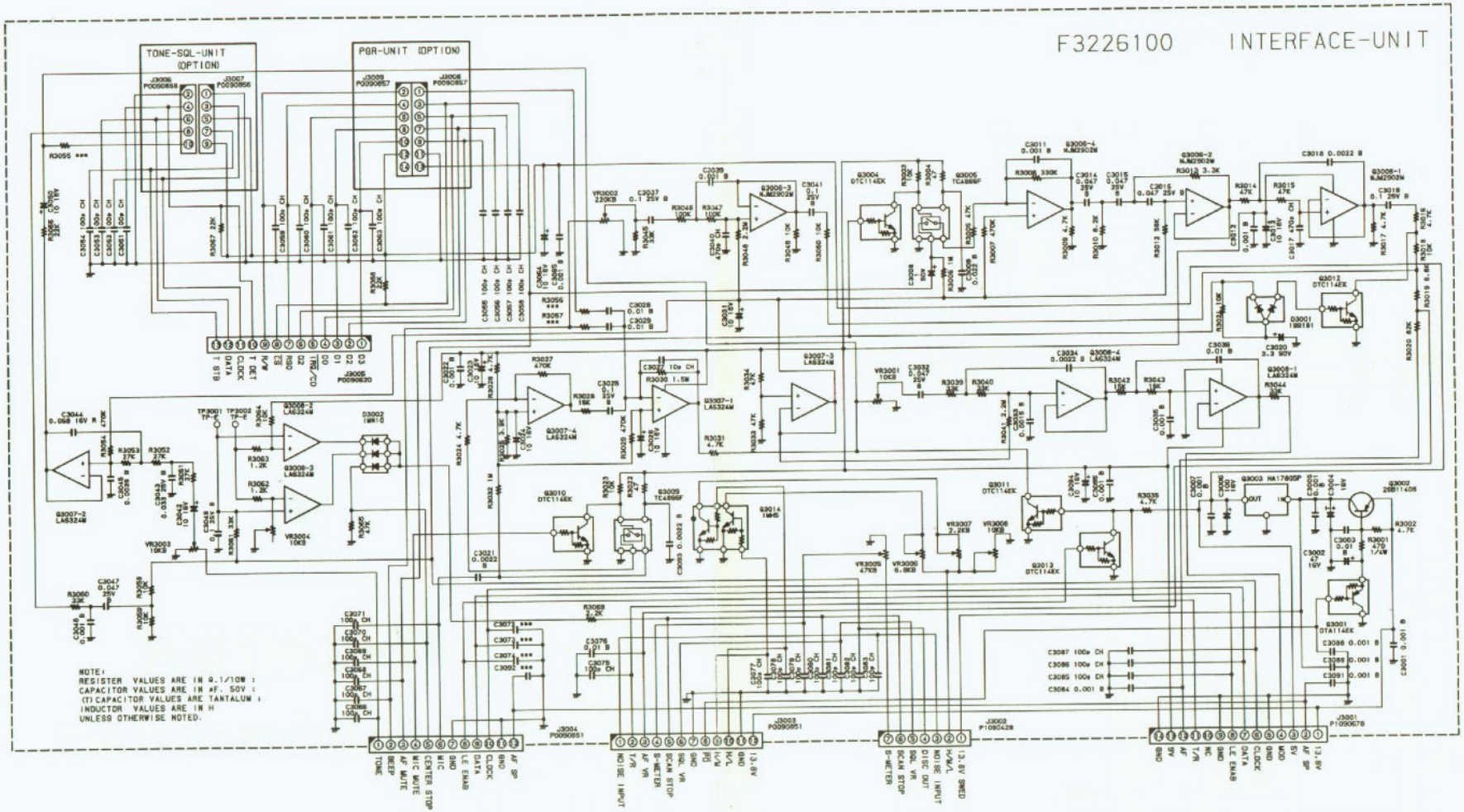
F3226100 INTERFACE-UNIT
TONE-SQL-UNIT (OPTION)
PGR-UNIT (OPTION)
NOTE:
RESISTER VALUES ARE IN Ω.1/10W ;
CAPACITOR VALUES ARE IN μF. 50V ;
(T) CAPACITOR VALUES ARE TANTALUM ;
INDUCTOR VALUES ARE IN H
UNLESS OTHERWISE NOTED.